Power

File: power.kicad_sch

User Input

File: user_input.kicad_sch

MCU

File: microcontroller.kicad_sch

Motor Driver

File: motor_driver.kicad_sch

Indicators

File: indicators.kicad_sch

Mounting points

M3 for threaded inserts + bolts
M2 for board support (no bolts)

M3 holes	M2 holes
H1	H5
H2	H6
H3	
H4	

Fiducials

FID1
FID2
FID3

SJFOM

Sheet: /
File: StepUp.kicad_sch

Title: System diagram

Size: A4	Date: 2025-03-03	**Rev: v0.4**
KiCad E.D.A. 9.0.7		Id: 1/6

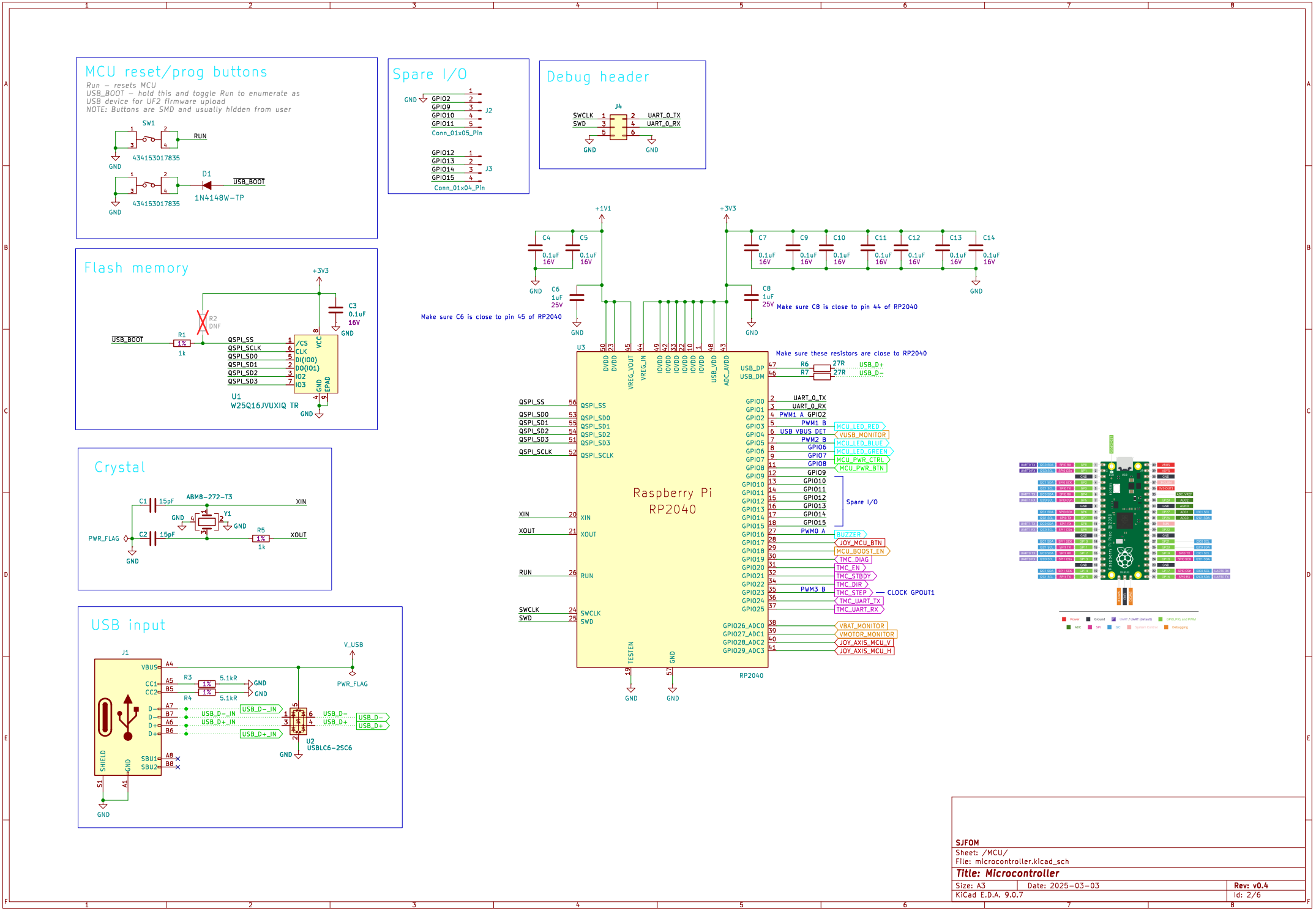

SJFOM		
Sheet: /MCU/		
File: microcontroller.kicad_sch		
Title: Microcontroller		
Size: A3	Date: 2025-03-03	Rev: v0.4
KiCad E.D.A. 9.0.7		Id: 2/6

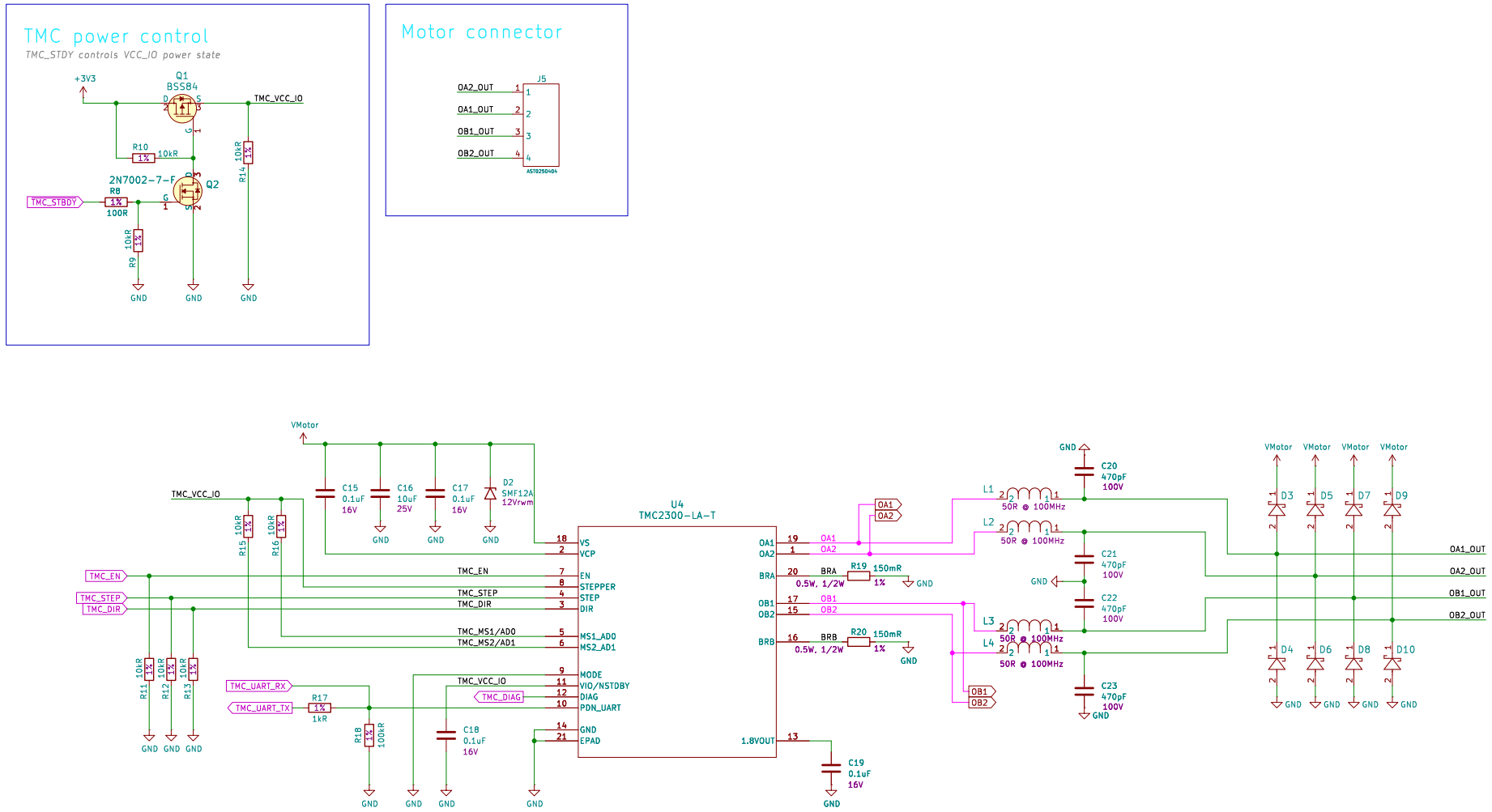

SJFOM		
Sheet: /Motor Driver/		
File: motor_driver.kicad_sch		
Title: Motor Driver		
Size: A3	Date: 2025-03-03	Rev: v0.4
KiCad E.D.A. 9.0.7		Id: 3/6

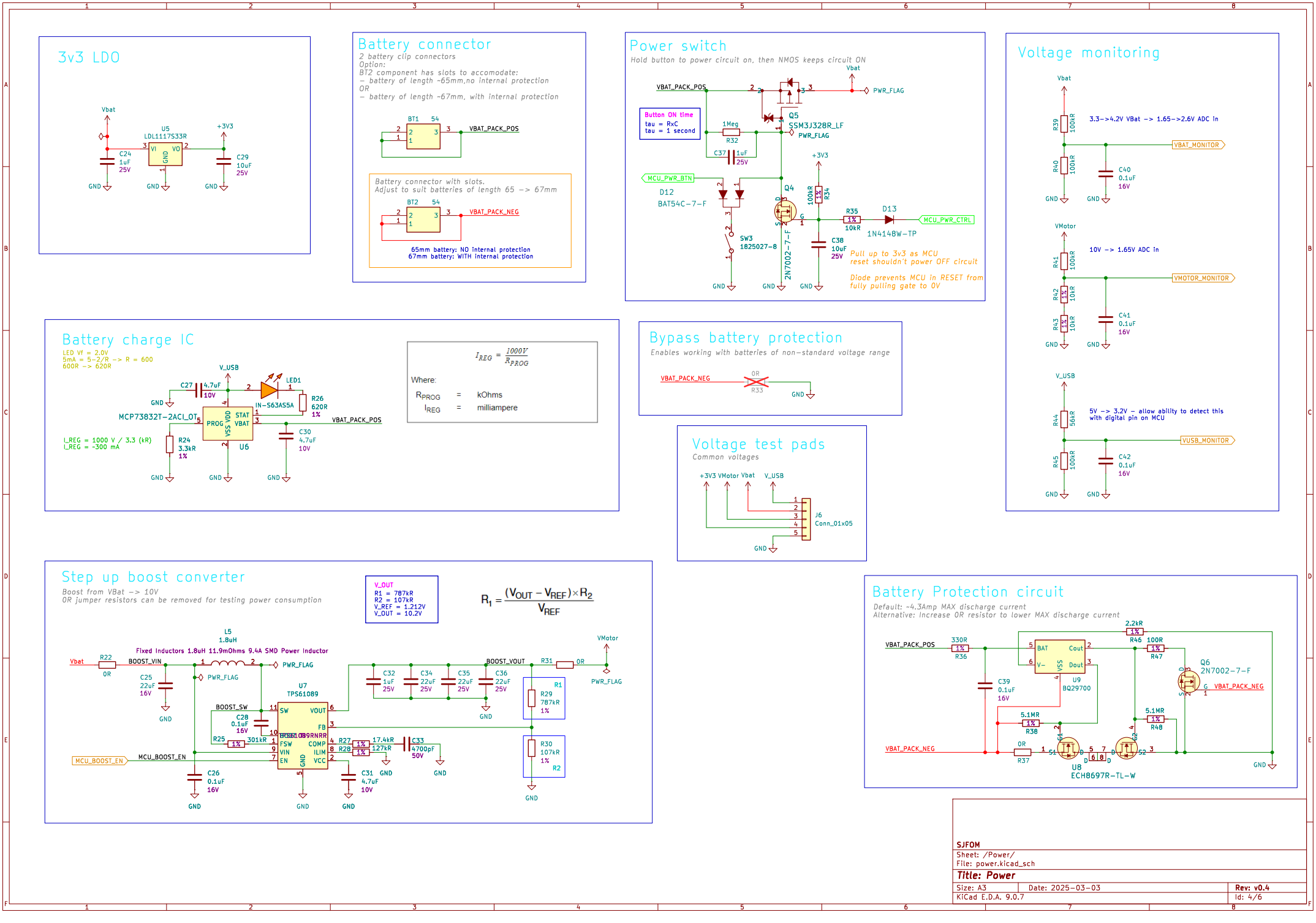
3v3 LDO
Vbat
U5
LDL1117S33R
VI
VO
GND
+3V3
C24
1uF
25V
C29
10uF
25V
Battery connector
2 battery clip connectors
Option:
BT2 component has slots to accomodate:
– battery of length ~65mm,no internal protection
OR
– battery of length ~67mm, with internal protection
BT1
54
VBAT_PACK_POS
Battery connector with slots.
Adjust to suit batteries of length 65 –> 67mm
BT2
VBAT_PACK_NEG
65mm battery: NO internal protection
67mm battery: WITH internal protection
Power switch
Hold button to power circuit on, then NMOS keeps circuit ON
Vbat
VBAT_PACK_POS
PWR_FLAG
Q5
SSM3J328R_LF
Button ON time
tau = RxC
tau = 1 second
1Meg
R32
C37
1uF
25V
+3V3
MCU_PWR_BTN
D12
BAT54C-7-F
Q4
100kR
R34
R35
1%
10kR
D13
1N4148W-TP
MCU_PWR_CTRL
SW3
1825027-8
2N7002-7-F
C38
10uF
25V
Pull up to 3v3 as MCU
reset shouldn't power OFF circuit
Diode prevents MCU in RESET from
fully pulling gate to 0V
Voltage monitoring
Vbat
R39
100kR
R40
100kR
3.3->4.2V VBat -> 1.65->2.6V ADC in
VBAT_MONITOR
C40
0.1uF
16V
VMotor
R41
100kR
R42
1%
10kR
R43
1%
10kR
10V -> 1.65V ADC in
VMOTOR_MONITOR
C41
0.1uF
16V
V_USB
R44
56kR
R45
100kR
5V -> 3.2V – allow ability to detect this
with digital pin on MCU
VUSB_MONITOR
C42
0.1uF
16V
Battery charge IC
LED Vf = 2.0V
5mA = 5-2/R -> R = 600
600R -> 620R
V_USB
C27
4.7uF
10V
LED1
IN-S63AS5A
R26
620R
1%
MCP73832T-2ACI_OT
PROG
VSS
VDD
STAT
VBAT
VBAT_PACK_POS
C30
4.7uF
10V
U6
I_REG = 1000 V / 3.3 (kR)
I_REG = ~300 mA
R24
3.3kR
1%
$I_{REG} = \frac{1000V}{R_{PROG}}$
Where:
R_{PROG} = kOhms
I_{REG} = milliampere
Bypass battery protection
Enables working with batteries of non-standard voltage range
VBAT_PACK_NEG
0R
R33
Voltage test pads
Common voltages
+3V3 VMotor Vbat
V_USB
J6
Conn_01x05
Step up boost converter
Boost from VBat -> 10V
OR jumper resistors can be removed for testing power consumption
V_OUT
R1 = 787kR
R2 = 107kR
V_REF = 1.212V
V_OUT = 10.2V
$R_1 = \frac{(V_{OUT} - V_{REF}) \times R_2}{V_{REF}}$
L5
1.8uH
Fixed Inductors 1.8uH 11.9mOhms 9.4A SMD Power Inductor
Vbat
R22
0R
BOOST_VIN
C25
22uF
16V
PWR_FLAG
U7
TPS61089
SW
VOUT
FB
FSW
VIN
EN
COMP
ILIM
VCC
GND
BOOST_SW
C28
0.1uF
16V
R25
1%
301kR
MCU_BOOST_EN
C26
0.1uF
16V
C32
1uF
25V
C34
22uF
25V
C35
22uF
25V
C36
22uF
25V
BOOST_VOUT
R31
0R
VMotor
R27
1%
17.4kR
R28
1%
127kR
C33
4700pF
50V
C31
4.7uF
10V
R1
R29
787kR
1%
R30
107kR
1%
R2
Battery Protection circuit
Default: ~4.3Amp MAX discharge current
Alternative: Increase OR resistor to lower MAX discharge current
2.2kR
1%
R46
VBAT_PACK_POS
330R
1%
R36
BAT
Cout
V-
Dout
VSS
U9
BQ29700
100R
1%
R47
Q6
2N7002-7-F
VBAT_PACK_NEG
C39
0.1uF
16V
5.1MR
1%
R38
5.1MR
1%
R48
VBAT_PACK_NEG
0R
R37
U8
ECH8697R-TL-W
SJFOM
Sheet: /Power/
File: power.kicad_sch
Title: Power
Size: A3
Date: 2025-03-03
Rev: v0.4
KiCad E.D.A. 9.0.7
Id: 4/6

Status LED's

Status LEDs, RGB 3-in-1, through-hole, clear dome

LED resistor calculations (matching mcd values)

RED – 20mA = 600 mcd → 1mA = 30mcd
– 300mcd = 10mA
– Vf=2V (typ), 3.3–2V = 1.3V/10mA = 130R → 120R

BLUE – 20mA = 300 mcd → 1mA = 15 mcd
– 300mcd = 20mA
– Vf=3V (typ), 3.3–3V = 0.3V/20mA = 15R → 22R

GREEN – 20mA = 1300 mcd → 1mA = 65 mcd
– 300mcd = 4.6mA
– Vf=3V (typ), 3.3–3V = 0.3V/4.6mA = 65R → 60R

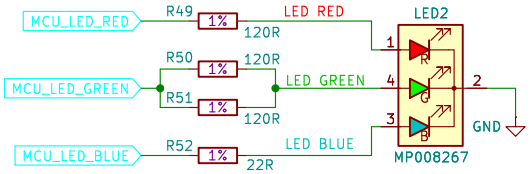

Buzzer

To indicate device states, f = 4kHz
~10V from the boost converter also used for the buzzer

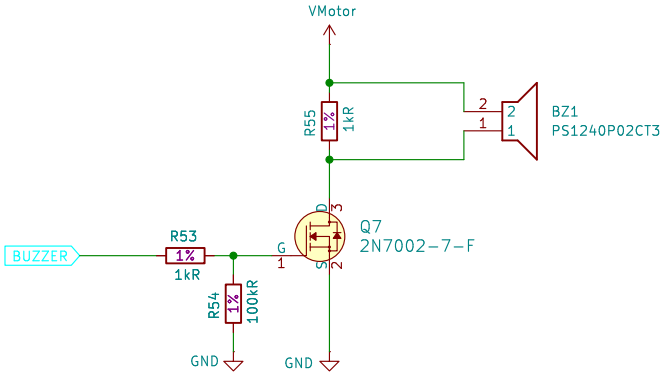

SJFOM

Sheet: /Indicators/
File: indicators.kicad_sch

Title: User Input

Size: A4	Date: 2025-03-03	**Rev: v0.4**
KiCad E.D.A. 9.0.7		Id: 5/6

Joystick

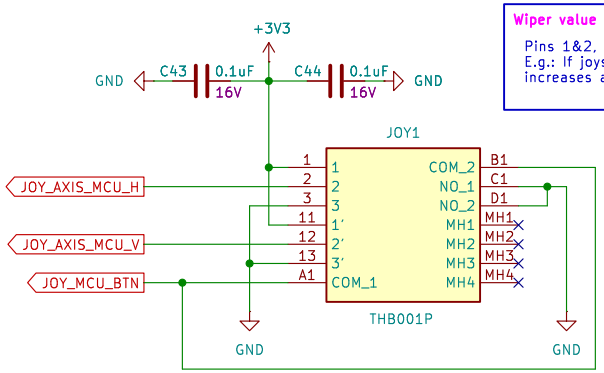

Wiper value

Pins 1&2, resistance goes down as wiper moved in that direction
E.g.: If joystick has pin 1 = 3v3 and pin 3 = GND, pin 2 voltage increases as josytick moved to pin 1, decreases as moved to pin 3

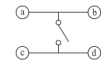

Circuit diagram

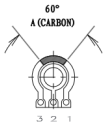

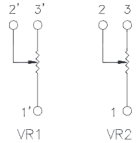

SJFOM

Sheet: /User Input/
File: user_input.kicad_sch

Title: User Input

Size: A4	Date: 2025-03-03	**Rev: v0.4**
KiCad E.D.A. 9.0.7		Id: 6/6